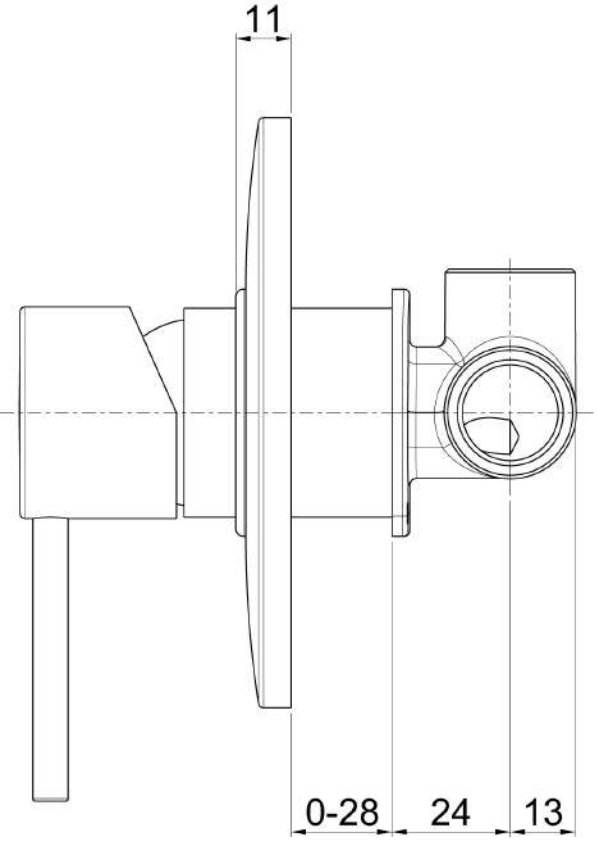
11
0-28
24
13

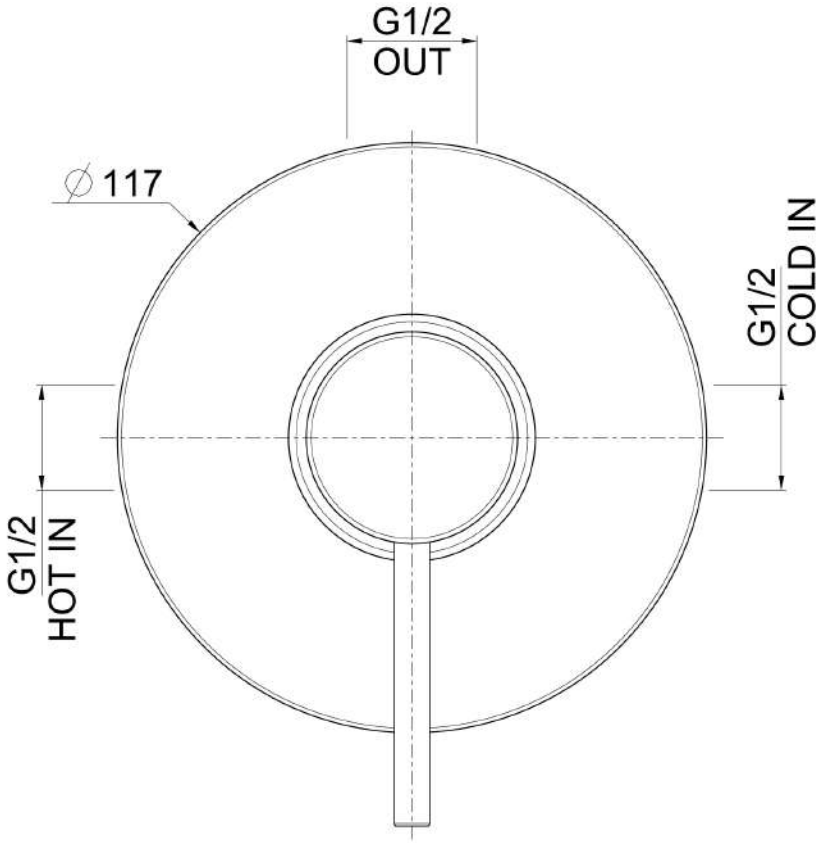
G1/2
OUT
∅117
G1/2
COLD IN
G1/2
HOT IN